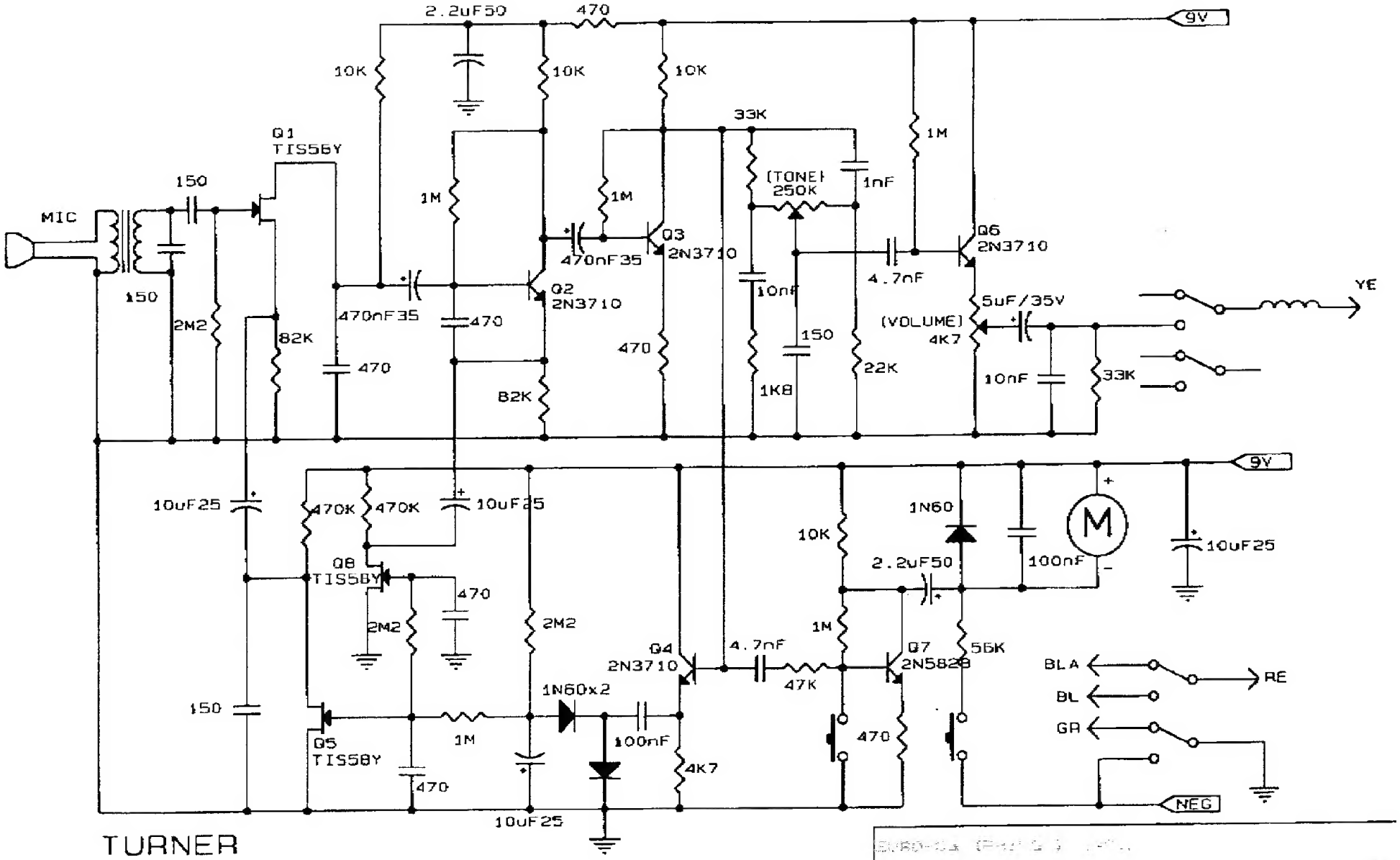

TURNER

PREPARED BY: REED

Title

EXPANDER 500

Size	Document Number	REV
A	ORIGINAL	

Date: January 18, 1997 Sheet of